Connector Details

REF	COMPANY MENUFACTURING	PN
J1	Samtec	SEML-115-02-03.0-H-D-WT
J2	Samtec	FTSH-107-01-L-DV-K
J3	Samtec	QSH-030-01-L-D-A-K
J4	Samtec	QSH-030-01-L-D-A-K
J5-J10	TE	1055688-1
J11	Molex	53261-0371
P1,P2	SAMTEC	QTH020-01-F-D-DP-A
J19	Molex	503471-0200
J18	Molex	53261-1471

J19 - Power	
Pin Num	Name
1	3.3V
2	GND

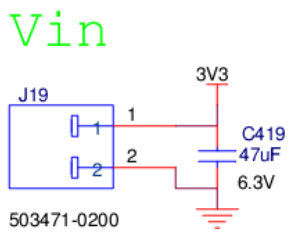

J1 - JTAG			
Pin Num	Name	Pin Num	Name
1	1.8V	16	UART2_TX
2	JTAG_VTREF	17	GND
3	GND	18	UART2_RX
4	JTAG_nTRST	19	GND
5	GND	20	NC
6	JTAG_TDI	21	FPGA-TCK
7	GND	22	GND
8	JTAG_TMS	23	FPGA-TDO
9	GND	24	VCCA
10	JTAG_TCK	25	FPGA-TMS
11	GND	26	VCCA
12	JTAG_TDO	27	NC
13	3.3V	28	NC
14	JTAG_nSRST	29	FPGA-TDI
15	GND	30	GND

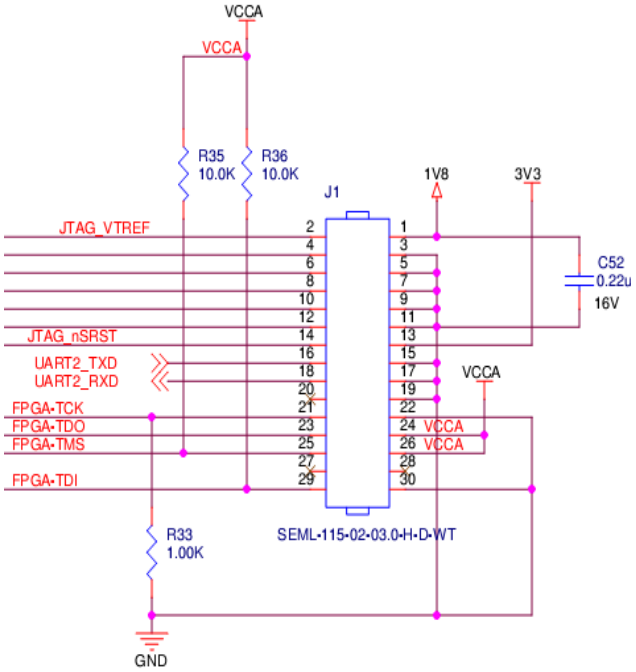

J2 - SD1 (FFC)	
Pin Num	Name
1	SD1_DATA2
2	GND
3	SD1_DATA3
4	GND
5	SD1_CMD
6	3.3V
7	SD1_CD
8	SD1_DATA0
9	GND
10	SD1_DATA1
11	GND
12	SD1_CLK
13	GND
14	
15	

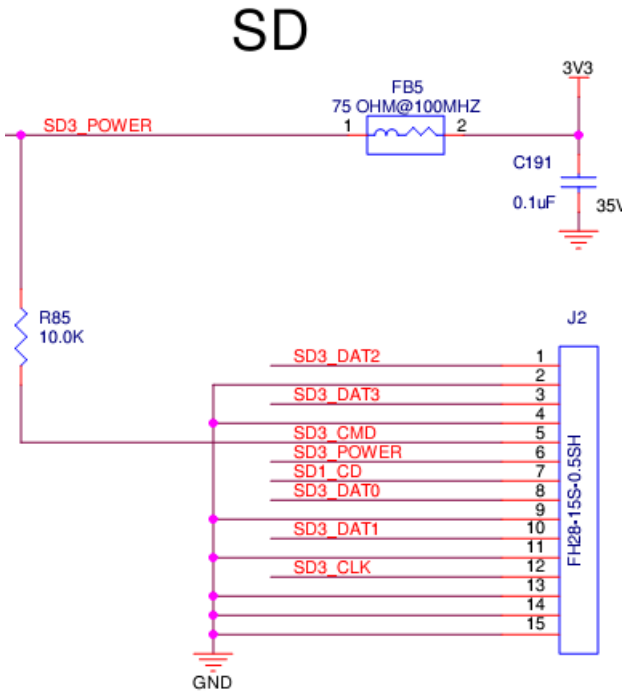

J11 - RS232 DEBUG	
Pin Num	Name
1	DCE_TX
2	DCE_RX
3	GND

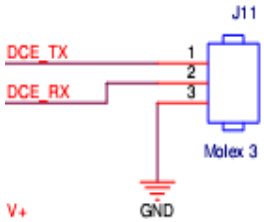

J3 - HD SDI PORT-1			
Pin Num	Name	Pin Num	Name
1	CSI1_VSYNC	31	GND
2	CSI1_D10	32	
3	SPI2_SS0	33	I2C3_SDA
4	CSI1_D9	34	DI1_DISP_CLK
5	DI0_PIN4	35	I2C3_SCL
6	CSI1_D11	36	UART4_RX
7	3V3	37	SPI2_MISO
8		38	UART4_TX
9	GN_IO4	39	GND
10	CSI1_D8	40	NC
11	GND	41	GND
12		42	
13	GN_IO2	43	GN_IO3
14	CSI1_D7	44	CSI1_D2
15	SPI2_SS1	45	DI1_PIN15
16	CSI1_D6	46	CSI1_D1
17	CSI1_D18	47	SPI2_SS2
18	CSI1_D5	48	CSI1_D3
19	DI1_PIN4_BLANK	49	CSI1_HSYNC
20	CSI1_D4	50	CSI1_D0
21	GND	51	GND
22		52	
23	SPI2_MOSI	53	CSI1_D17
24	CSI1_D12	54	DI1_PIN2_HSYNC
25	CSI1_PIXCLK	55	GN_IO1
26	CSI1_D13	56	DI1_PIN2_HSYNC
27	SPI2_SS3	57	CSI1_D19
28	CSI1_D14	58	GND
29	CSI1_D16	59	CSI1_DATA_EN
30	CSI1_D15	60	SPI2_CLK

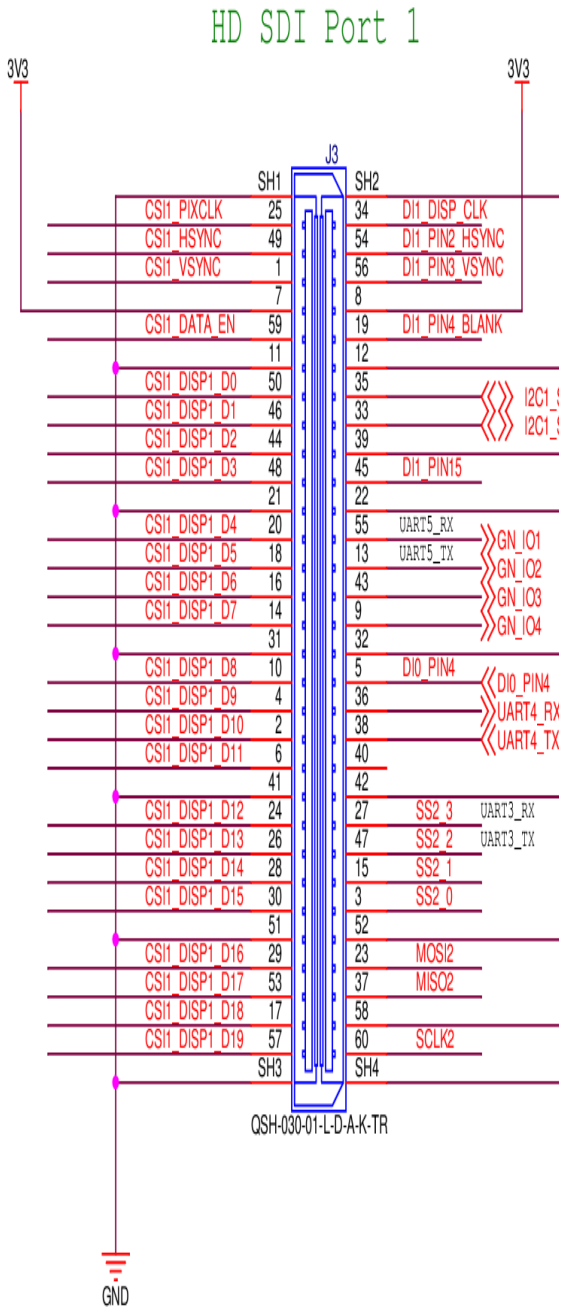

J4 - HD SDI PORT-0			
Pin Num	Name	Pin Num	Name
1	CSI0_DATA_EN	31	GND
2	ENC_BLANK	32	
3	CSI0_HSYNC	33	CSI0_D16
4	DISP0_D16	34	DISP0_D7
5	CSI0_VSYNC	35	CSI0_D17
6	DISP0_D19	36	DISP0_D0
7	3.3V	37	CSI0_D18
8		38	DISP0_D8
9	CSI0_PIXCLK	39	CSI0_D19
10	DISP0_D17	40	ENC_VSYNC
11	GND	41	GND
12		42	
13	CSI0_D3	43	CSI0_D4
14	DISP0_D18	44	DISP0_D9
15	CSI0_D2	45	CSI0_D5
16	DISP0_D3	46	DISP0_D10
17	CSI0_D1	47	CSI0_D6
18	DISP0_D1	48	DISP0_D11
19	CSI0_D0	49	CSI0_D7
20	DISP0_D4	50	ENC_CLOCK
21	GND	51	GND
22		52	
23	CSI0_D12	53	CSI0_D8
24	DISP0_D2	54	DISP0_D12
25	CSI0_D13	55	CSI0_D9
26	DISP0_D5	56	DISP0_D13
27	CSI0_D14	57	CSI0_D10
28	DISP0_D6	58	DISP0_D14
29	CSI0_D15	59	CSI0_D11
30	ENC_HSYNC	60	DISP0_D15

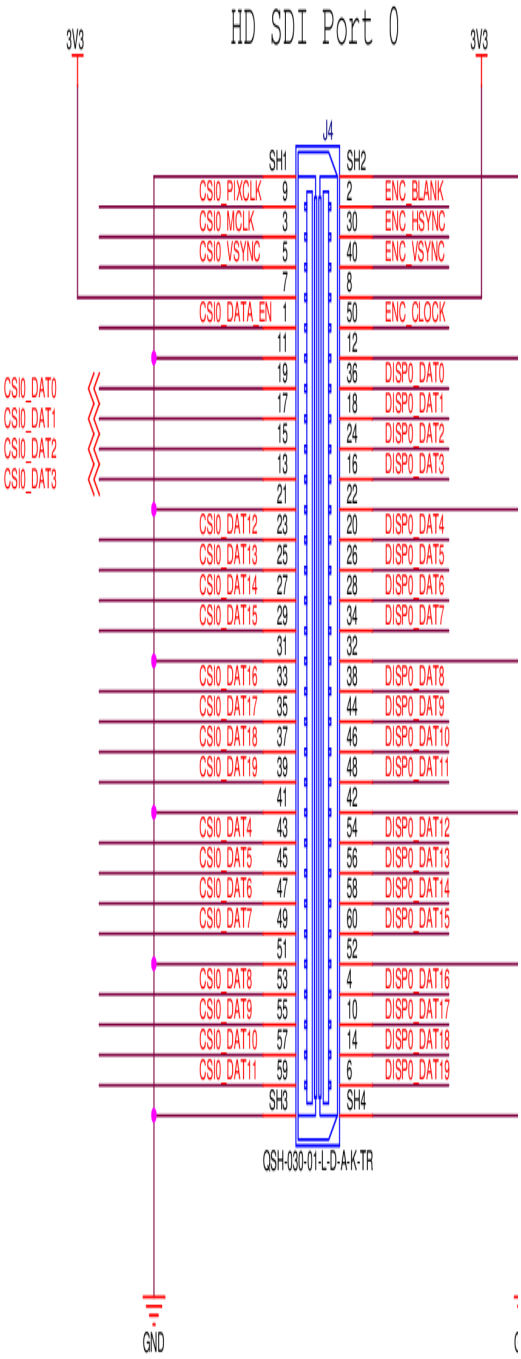

J5-J6 AUDIO	
PIN Num	Name
1	LINE_IN+
2	LINE_IN-
(J6)1	LINE_OUT+
2	LINE_OUT-

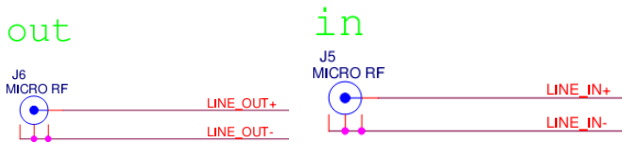

J7-J10 -VIDEO_IN\OUT	
Pin Num	Name
1	CVBS\COMPOSITE
2	GND
3	
4	

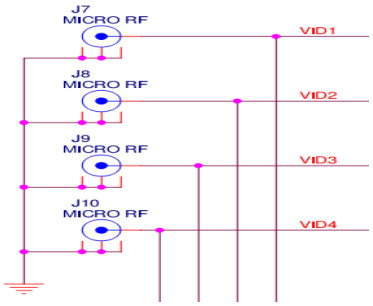

J18 – I\F	
Pin Num	Name
1	ETH_TX_P
2	ETH_TX_N
3	GND
4	ETH_RX_P
5	ETH_RX_N
6	GND
7	DATA_P
8	DATA_N
9	GND
10	CLK+P
11	CLK_N
12	GND
13	UART1_TX
14	UART1_RX

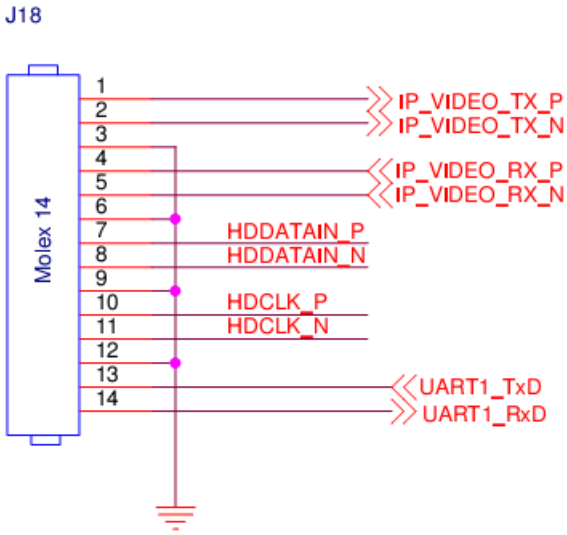

P1 - I\F			
Pin Num	Name	Pin Num	Name
1	NC	21	NC
2	ETH_TX_P	22	HDDATA_IN_P
3	NC	23	NC
4	ETH_TX_N	24	HDDATA_IN_N
5	HDCLK_P	25	NC
6	ETH_RX_P	26	HDDATA_O_P
7	HDCLK_N	27	NC
8	ETH_RX_N	28	HDDATA_O_N
9	NC	29	NC
10	GND	30	NC
11	GND	31	NC
12	NC	32	NC
13	NC	33	NC
14	UART1_TX	34	NC
15	NC	35	NC
16	UART1_RTS	36	NC
17	NC	37	3.3V
18	UART1_RX	38	
19	NC	39	
20	UART1_CTS	40	

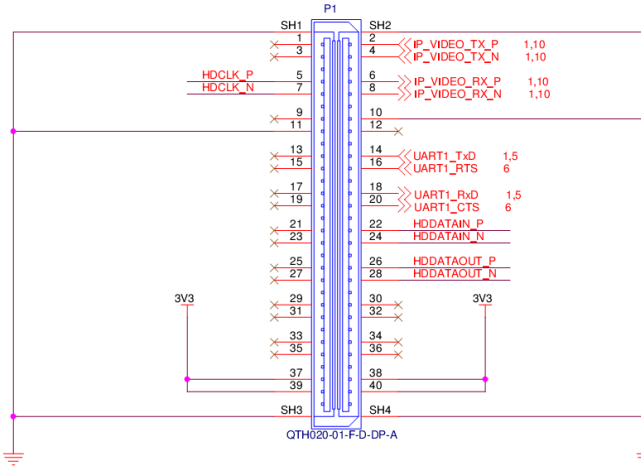
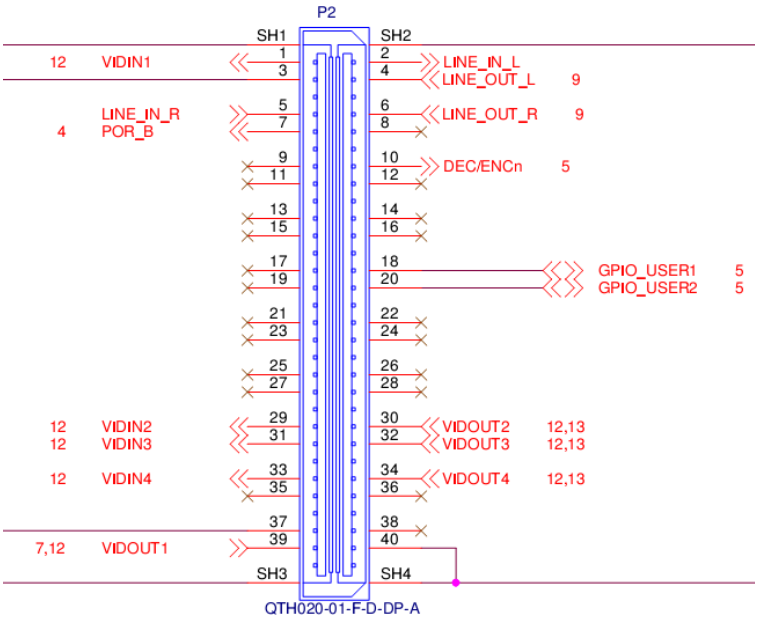
P2 - I\F			
Pin Num	Name	Pin Num	Name
1	VID_IN1	21	NC
2	LINE_IN_L	22	NC
3	GND	23	NC
4	LINE_OUT_L	24	NC
5	LINE_IN_R	25	NC
6	LINE_OUT_R	26	NC
7	POR_B	27	NC
8	NC	28	NC
9	NC	29	VID_IN_2
10	DEC\ENC	30	VID_OUT_2
11	NC	31	VID_IN_3
12	NC	32	VID_OUT_3
13	NC	33	VID_IN_4
14	NC	34	VID_OUT_4
15	NC	35	NC
16	NC	36	NC
17	NC	37	GND
18	GPIO1_USER	38	NC
19	NC	39	VID_OUT_1
20	GPIO2_USER	40	GND